BRIDGE CUM BANDHARA – A CROSSING AND STORAGE BRIDGE STRUCTURE

[1]PRACHI S. TETU, [2]R.K.INGLE, [3]P. L. BONGIRVAR

[1]M.Tech student, Visvesvaraya National Institute of Technology, Nagpur
[2]Professor, Visvesvaraya National Institute of Technology, Nagpur
[3]Retd secretary, PWD, Maharashtra
Email: [1]prachi.tetu27@gmail.com, [2]rkingle@rediffmail.com, [3]plbongirwar@rediffmail.com

Abstract – In our country where many rivers run dry after the end of monsoon, it is a need of the day to block the post monsoon flow for drinking, irrigation etc purposes. Bridge cum Bandhara (BCB) system is a dual purpose bridge structure which fulfills both crossing as well as water retaining motives. This paper emphasizes the analysis and design of different type plans of Bandhara system for different soil strata. Design forces are taken for Bandhara piers using IRC: 6-2010 and stability of structure is checked against overturning, sliding, uplift and for maximum and minimum pressures at the base. A parametric study is carried out to decide optimum dimensions of Bandhara piers for various heights of retained water. Moreover quantities are estimated for all the type plans and compared. The study reveals that with the judicial optimum design, the cost of BCB would be well within financial norms depending upon the storage on U/S side.

Index Terms– liftoff, needles, piers, shear key, weir

I. INTRODUCTION

By enhancing the scope of existing bridge and converting it into water retaining structure, the availability of water can be increased. ***Appropriate secondary piers and gates/needles are needed to bridge structure so as to plan it as a BCB.*** Gates should be detachable which can be fixed manually or automatically after monsoon. The standard type plans have been evolved to convert existing bridge into BCB. Fig 1 shows a typical BCB with curved needles on U/S side. A small overflowing weir up to a height of FTL is designed in one of the spans of piers to discharge surplus water.

Fig.1 Bridge cum Bandhara System. (Adopted from SMC K.T. weir Needle and Needle Dam Manufacturer & Exporter from Pune, India)

II. EVOLUTION OF TYPE PLANS OF BRIDGE CUM BANDHARA

Type plans are evolved through spreadsheets for various foundation conditions, river bed slope, height of water to be retained etc.

Type plans of intermediate Bandhara piers depend up on the straight length, width of pier for different material grades, also height, loading standards, water velocities and earth pressure are considered. Flowchart given in fig 2 explains the different types of Bandhara based on site rock condition for new and existing Bridge structures

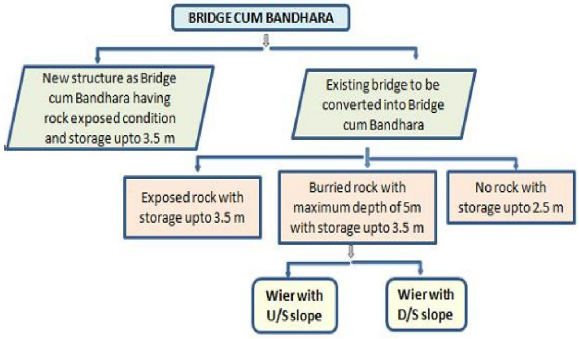

Fig. 2 Flowchart of BCB based on rock conditions

Types of Bandhara systems considered are as follows:

i. Intermediate piers on raft exposed to rock
ii. Intermediate piers on PCC weir (batter on D/S side)
iii. Intermediate piers on PCC weir (batter on U/S side)
iv. Intermediate piers on soft soil with cutoff walls
v. Intermediate piers on box type foundation

Stability of weir is checked overturning, sliding, max/min pressure etc for three conditions:

i. Water up to HFL with no gates condition (without earthquake)
ii. Water up to FTL with gates (without earthquake)
iii. Water up to 1m height with gates (with earthquake)

The safety factors are considered for overturning (2.0 (General condition) & 1.5 (with EQ)), sliding (1.5 (General condition) & 1.2 (with EQ)), Maximum pressure less than SBC and minimum pressure greater than zero. Percentage liftoff is maintained below 20% for general condition and below 30% for EQ.

III. PARAMETERS FOR STANDARD BCB

The following parameters are considered for arriving at standardized sections

i. Storage depth from 2m to 3.5m
ii. Intermediate Bandhara piers are of RCC wall type 400mm thick
iii. Straight length of pier (Lp)- 1.8m for water depth up to 2.5m and 2.2 m for water depth beyond 2.5m
iv. Clear span between the piers is from 2.0m to 3.0m
v. Depth of foundation(Df) for raft type is 0.6m and for weir type 0.3m
vi. U/S offset (S_2) and D/S offset (S_1) - For raft type,
vii. Hw up to 2.5 m - S_2 = 0.8m & S_1 = 0.7m and Hw beyond 2.5m - S_2 = 1.8m and S_1 = 1m. Whereas for weir type, Hw up to 2.5 m - S_2 = 0.6m & S_1 =0.3m and Hw beyond 2.5m - S_2=0.8m and S_1= 0.5m

Loading conditions for analysis of Bandhara piers are given below

i. All possible loadings as per IRC: 6-2010
ii. Trapezoidal variation of uplift for gates closed condition
iii. 20° variation in moving water current
iv. Stabilizing passive earth pressure

IV. TYPE PLANS AND DESIGN PHILOSOPHY FOR BCB

All five types of Bandhara system are explained below with various loads and summery tables of optimum dimensions are tabulated.

A. *Intermediate piers on raft exposed to rock*

Fig. 3 shows the elevation and plan of secondary piers on raft foundation having rock up to the ground level with footing depth of 0.6m.

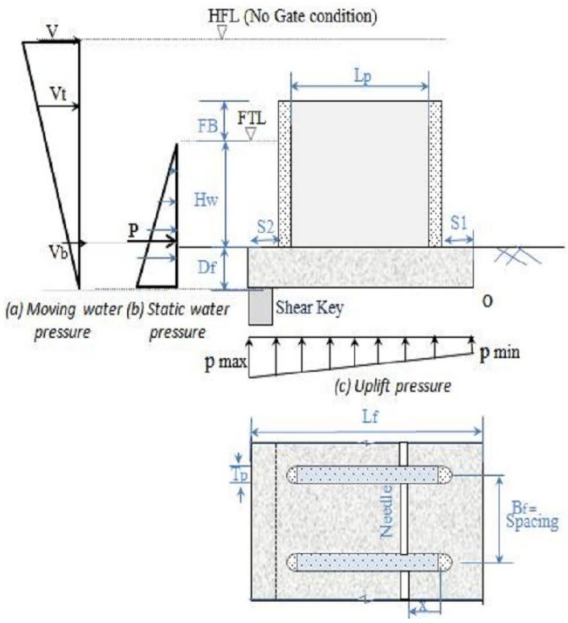

Fig. 3 Bandhara on raft foundation

The optimum parameters for raft type are tabulated in table I while arriving at standard section

Table I

Hw	Lp	Lf	S_1	S_2
2.0	1.8	3.7	0.7	0.8
2.5	1.8	3.7	0.7	0.8
3.0	2.2	4.6	1.0	1.0
3.5	2.2	5.4	1.0	1.8

B. *Intermediate piers on PCC weir (batter on D/S side)*

Rock level is at about 5m depth below ground for which PCC weir is provided along with raft of 0.3m depth and above which piers are designed shown in fig.4. Passive soil on D/S slope imparts to the stability of structure.

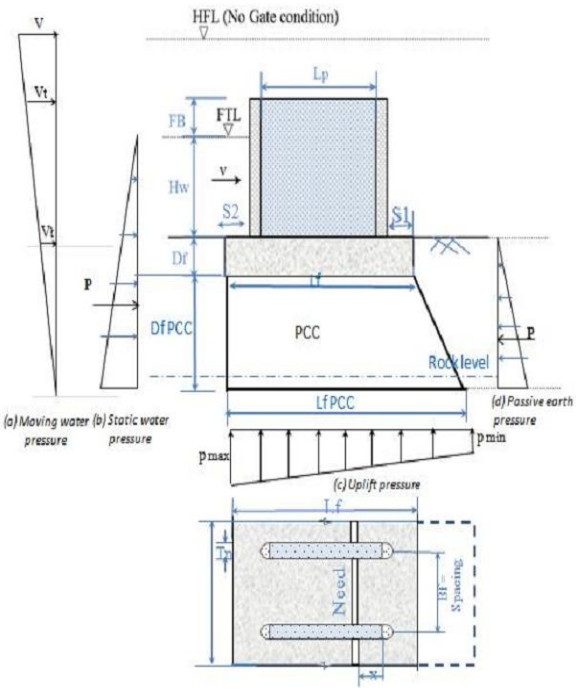

Fig. 4 Bandhara on PCC weir D/S slope

Summery table II gives optimum dimensions for PCC weir with batter D/S

Table II

Hw	Lp	Lf	S_1	S_2
2.0	1.8	3.7	0.7	0.8
2.5	1.8	3.7	0.7	0.8
3.0	2.2	3.6	0.5	0.5
3.5	2.2	3.6	0.5	0.5

C. *Intermediate piers on PCC weir (batter on U/S side)*

In Fig.5, PCC weir with U/S slope have the additional water load on the U/S slope adds to stability.

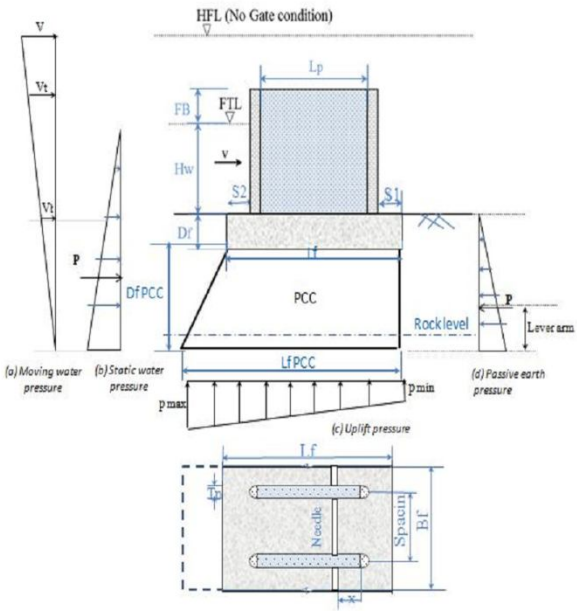

Fig. 5 Bandhara on PCC weir U/S slope

Summery table III for weir U/S is as follows

Table III

Hw	Lp	Lf	S_1	S_2
2.0	1.8	3.7	0.7	0.8
2.5	1.8	3.7	0.7	0.8
3.0	2.2	3.6	0.5	0.5
3.5	2.2	3.6	0.5	0.5

D. Intermediate pier on soft soil with cutoff walls

Detached cutoff walls of 2.5m depth are provided on both U/S & D/S sides prevents scouring along with PCC aprons and stone pitching which increases the seepage length. Bligh's hydraulic theory is applied to calculate uplift forces with different safe hydraulic gradients at U/S and D/S ends.

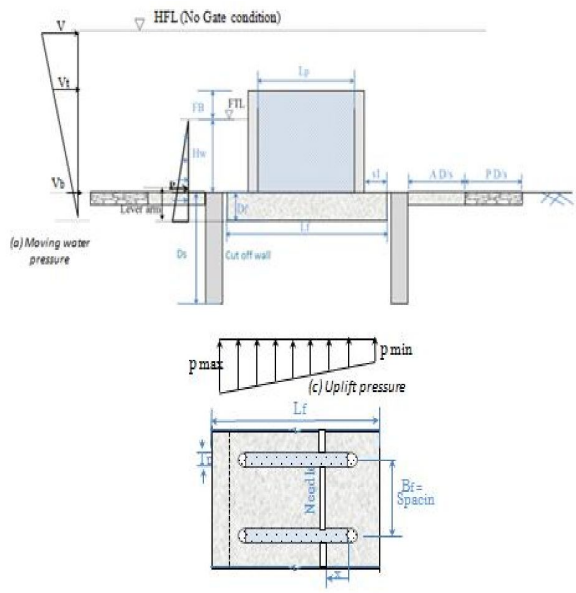

Fig. 6 Bandhara with detached cutoff walls

Table IV summarized the dimensions detached cutoff wall type are tabulated below

Table IV

Hw	Lp	Lf	S_1	S_2
2.0	1.8	3.7	0.7	0.8
2.5	1.8	3.7	0.7	0.8
3.0	2.2	4.6	1.0	1.0

E. Intermediate piers on box type foundation

Another type of foundation is box type shown in fig. 7 in which stone filling inside the RCC box imparts to the stability.

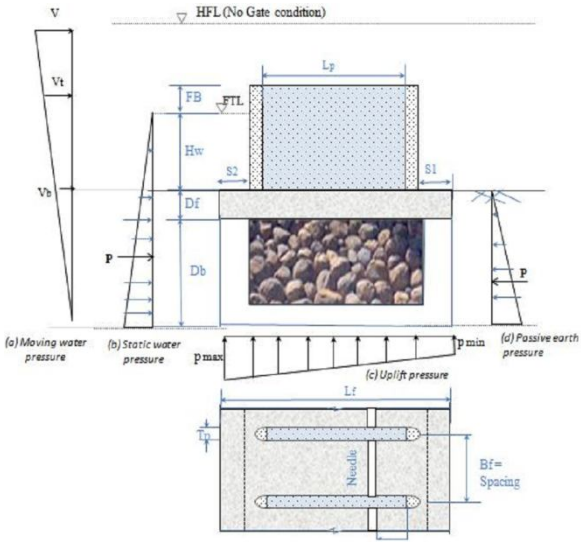

Fig. 7 Bandhara on box type foundation

For box type foundation, the optimum dimensions are given in table V.

Table V

Hw	Lp	Lf	S_1	S_2
2.0	1.8	3.7	0.5	0.5
2.5	1.8	3.7	0.5	0.5
3.0	2.2	3.6	0.5	0.5
3.5	2.2	3.6	1.0	0.5

V. STUDY BASED ON QUANTITY ESTIMATION

Following is the graphical representation of concrete and steel quantities per meter length for all above cases:

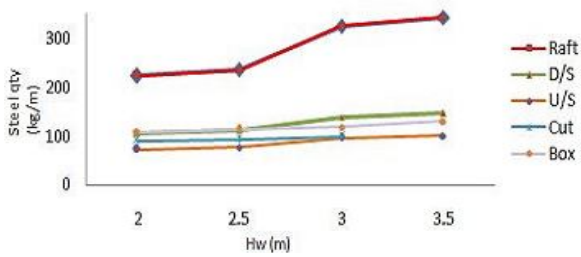

Fig. 8 Steel quantity for various types of Bandhara systems

From above comparison it is observed that least steel quantity is required for weir U/S side sloped where as raft is throughout the length of bridge requires huge amount of steel.

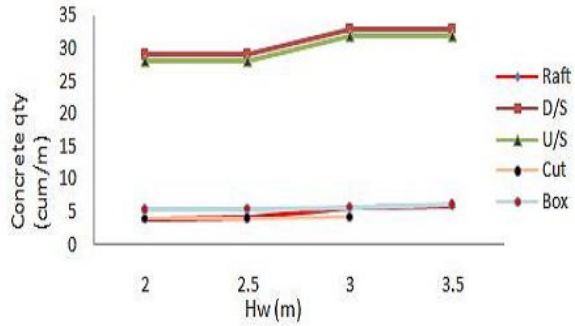

Fig. 9 Concrete quantity for various types of Bandhara systems

As raft type foundation with cutoff walls requires least concrete quantity.

CONCLUSIONS

Following are the observations listed from analysis and design of BCB system

1. Needles are always advisable to provide more on D/S side as it causes more water weight leads to more stability to structure
2. Intermediate piers on PCC weir with batter U/S is preferable for any type of bridges as D/S batter may interrupts any the future construction on D/S side.
3. Use of new material like colocrete, automatic closing gates reduces the cost of maintenance and appreciable enhancement in ground water table. This way can contribute to conserve the water for drought free tomorrow.

NOMENCLATURE

Hw- Height of water to be retained
Lp- straight length of pier
Df- Depth of foundation
Lf- Length of foundation
Lf pcc- Length of PCC weir at base
Df pcc- Depth of PCC weir
Tp- Thickness of pier
S_1- D/S offset beyond pier length
S_2- U/S offset beyond pier length

REFERENCES

[1] P.L. Bongirwar, Dr. A.G. Namjoshi, M.M. Jaiswal, "Dual purpose bridge structures – Crossings and storage – need of the day" Journal of the Indian Road Congress, Vol 64-3, December 2003.
[2] A.J. Kappos , G.D. Manolis, and I.F. Moschonas, "Seismic assessment and design of R/C bridges with irregular configurations, including SSI effects", Engineering Structures 24 (2002) 1337–1348
[3] Rupen Goswami, and C. V. R. Murty, "Seismic vulnerability of RC bridge piers designed as per current IRC codes including Interim IRC: 6-2002 provisions", Dept of Civil Engineering, IIT Kanpur, Kanpur 208016
[4] Seong Haeng Lee, Kyoung Nam Kim, and Solomon C. Yim, F.ASCE, "Experimental study of flow-induced vibration of lens-shaped vertical lift gates", ASCE J. Waterway, Port, Coastal, Ocean Eng.
[5] J. E. B. Guirguis and S. S. F. Mehanny, M.ASCE, "Evaluating code criteria for regular seismic behavior of continuous concrete box girder bridges with unequal height piers" , ASCE J. Bridge Eng. 2013.18:486-498.
[6] By Dimos Polyzois, Member, Walter J. Muzyczka , "Behavior of cast-iron spillway gate wheels", J. Mater. Civ. Eng. 1994.6:495-512.

★★★