International Journal of Science and Research (IJSR)
ISSN (Online): 2319-7064
Index Copernicus Value (2013): 6.14 | Impact Factor (2013): 4.438

Analysis and Design of Skew Bridges

Nikhil V. Deshmukh[1], Dr. U. P. Waghe[2]

[1]P.G. Student (M-Tech - Structures), Y.C.C.E., Nagpur- 441110, Maharashtra, India

[2]Principal & Professor, Yeshwantrao Chavan College of Engineering, Nagpur- 441110, Maharashtra, India

Abstract: ***Bridges are very special type of structures. They are characterized by their simplicity in geometry and loading conditions. The reinforced concrete bridges usually carried uniformly distributed dead load, vehicular live load to its surface and transfers same to the support by flexure, shear and torsion. Newly designed bridges are often skew. This is due to space constraints in congested urban areas. It can be also needed due to geographical constraints such as mountainous terrains. However force flow in skew bridges is much more complicated than straight bridges. Therefore careful investigation and numerical analysis needs to be performed, in which a skew bridges can be modeled in several ways. Skewed slab bridges were modeled using finite-element methods using CsiBridge computer software to study their behavior under uniform and moving loads with to determine the most appropriate force response for design.***

Keywords: Skew Angle, Finite Element Method, IRC Class A Loading

1. Introduction

The majority of bridge decks that are constructed now days are often some skewed or curved. Tight geometry is often placed on highway structures due to right of way restrictions in congested urban areas. If a road alignment crosses a river or any other obstruction at an inclination different from 90°, a skew crossing may be necessary. Skewed bridges are one of the most economical and satisfying construction in such conditions. In addition skew bridges are common at highway interchange, river crossing and other extreme grade changes where skew geometry is necessary due to space limitations. In fair meaning, the plan of bridge may appear like parallelogram in plan view. This condition occurs when bridge alignment is not exact perpendicular or making some angle to crossing. The term angle of skew or skew angle is generally applied to the difference between alignments of an intermediate or end support and a line square to the longitudinal axis of the bridge above. Thus, on straight bridge, the skew angle at all supports would normally be the same and the term skew angle can be applied to the bridge as a whole. The simple form of bridge is right deck but demand of skew bridge is increasing due to various factors.

2. Literature Review

[1]Vikash Khatri, Anshuman Khar, P. K. Singh, P. R. Maitiin their research work conducted grillage analysis method for analysis of bridges. A total of nine different grid sizes (4 divisions to 12 divisions) are made using grillage analogy and have been studied on skew angles 30°, 45° and 60° to determine the most effective grid size. In their study is observed that finite element method (FEM) and Grillage method results are not similar for every grid size. They can be different for each grid size depending on various parameters. It is also observed from the analysis that mostly seven divisions on gridding is appropriate i.e., ratio of transverse grid lines to longitudinal grid lines is 1.8-2.0. Also variation of grid sizes analysis results predicts that, variation in reaction value is same in FEM and Grillage method but variation of bending and torsion moment in FEM is lower than grillage results. So, FEM may be preferred for analysis of skew bridges.

[2]Arindham Dhar, Mithil Mujumdaar, Mandakini Chowdhary, Somnath Karmakar presented the comparison between behavioral aspects of a skew bridge by creating and analyzing straight counterparts using a 3D Bridge model in Finite Element Analysis software – ABAQUS in their research work. The results of the bridge model in ABAQUS show that with the increase in the skew angle, the support shear and mid-span moments of obtuse longitudinal girders increases while these parameters decrease with the corresponding acute angle in longitudinal girders. Most importantly, the increase un torsional moment is observed with rapid increase in obtuse skew angle in longitudinal girder. Although the changes are insignificant for inclusion in the design up to 20º skew, but at higher skew angles the increase is considerable (25% increase for 45º skew). These changes must be taken into account for correctly designing an obtuse girder. They also pointed out that with the increasing skew angle, torsional moments rise rapidly in obtuse angled girders.

[3]M. Ameerutheen, Sri. Aravindan in performed their research study on the two lanes solid slab and on beam and slab arrangement (composite) on various skew angles. 1tonne/sq m of imposed load is given on each model and comparison of the results is observed to study the characteristics of skew deck and also investigational study on the skew effect if the bridge is subjected to IRC loading is completed. The analysis is done using the software STAAD-PRO to study the effect of stresses in Solid slab & Composite Bridge Deck slab. The effect of Skew angle in Composite Bridge is observed for same modesl using STAAD-PRO. The critical section in skew angle where behavior is dominant is also found out by this analysis which can be effectively used while designing skew bridge.

[4]Mehrdad Bisadi in his research carried out finite element (FE) analysis on an existing railway bridge. For this purpose, the railway bridge is customized and analyzed by using finite element software, LUSAS. Analysis for Eigen value and moving load is carried out to obtain the natural frequencies and the displacement of the simulated model under the axial load of train passage. Different values of damping ratios and Young's modulus are used in these

analyses to observe the effects of these values which are presented in this study. Meanwhile, different values of damping ratios and Young's modulus were used and the effects of them have shown in such an analytical study. It has shown that these two parameters, damping ratio and Young's modulus, played a key role in the dynamic behaviour of the bridge.

3. Modeling and Analysis

The FEM consists of solving mathematical model which is obtained by idealizing structure as an assembly of various discrete two or three dimensional element which are connected to each other at their nodal points, provided an appropriate number of degrees of freedom is used at each time. IRC Load Combinations of bridges has been implemented within CsiBridge. . In bridge deck analysis the few dominant places where maximum bending moment, shear force and torsional force are loading places at centre and near support of span. Considerable power and flexibility is provided for determining the maximum and minimum displacements, forces, and stresses from multiple-lane loads on complex structures, such as highway interchanges.

For each model, the model configuration is kept same, only skew angle is changed from 15° to 45°. Span of 6m, 8, 10m and 12m bridge is considered for each IRC Class A Loading. The main aim in this study is to observe and conclude bending moment, torsional moment and shear force with respect to change in skew angle.

The plan layout of the reinforced skew bridge slab is as shown in Figures 1 to 5. In this study, the width of lane or width of carriageway is deliberately kept same to study the effect. The width of carriageway is kept 5 m for all bridge models. The input data given for the buildings is detailed below.

Example Description
Bridge Type: Slab on Girder Bridge
Longitudinal Girder Section: Rectangular (0.4m x 0.8m)
Transverse Girder Section: Rectangular (0.3m x 0.5m)
Depth of Deck Slab: 300mm
Wearing Coat Thickness: 80mm
Diameter of Column: 1.2m
Bent Cap Section: 1.2m x 1.5m
Grade of Steel: Fe415
Grade of Concrete: M25
Number of Interior girders: 2
Bearing: Elatomeric Neoprene Bearing

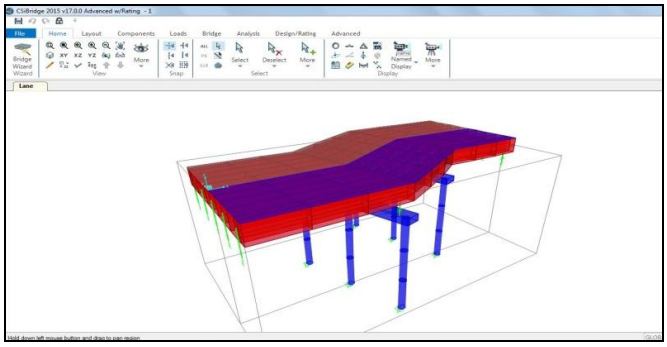

Figure 1: Skew Bridge with 15° angle

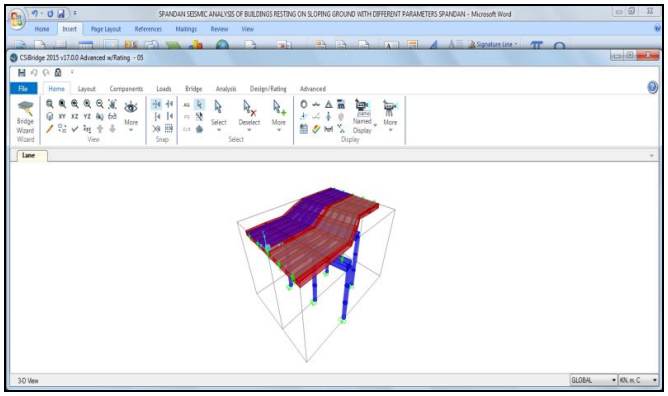

Figure 2: Skew Bridge with 25° angle

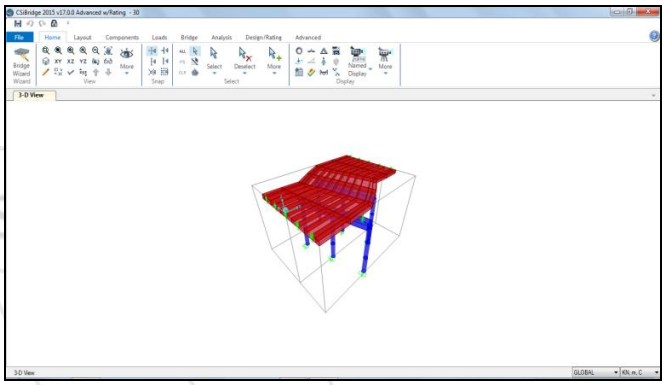

Figure 3: Skew Bridge with 30° angle

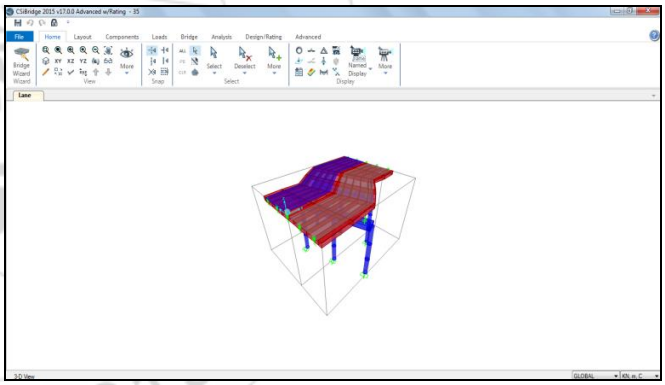

Figure 4: Skew Bridge with 35° angle

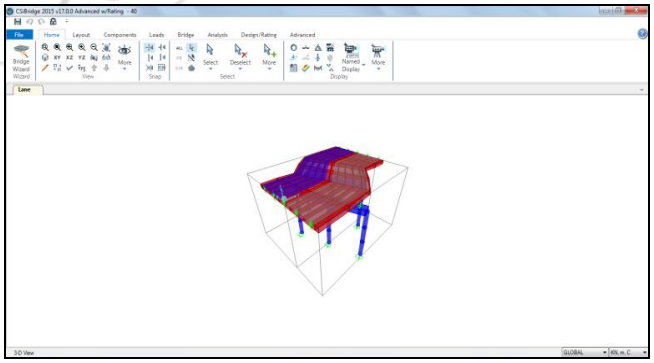

Figure 5: Skew Bridge with 40° angle

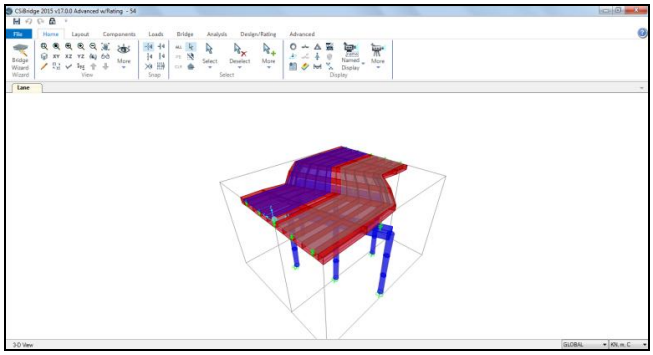

Figure 6: Skew Bridge with 30° angle

4. Result and Discussion

1) Shear Force

The maximum shear forces at each skew bridge with respect to their spans are presented in Graphical format. For better comparability the shear force of each graph contain the table of observed reading.

SHEAR FORCE (kN)					
Skew Angle	Span				
	4	6	8	**10**	**12**
15°	257.43	346.25	413.94	465.82	557.92
25°	433.09	353.14	415.94	502.72	560.06
30°	443.6	375.18	416.98	503.74	561.75
35°	445.83	350.26	418.02	504.93	563.67
40°	448.37	372.45	419.18	506.83	565.01
45°	440.92	377.05	416.66	509.24	566.58

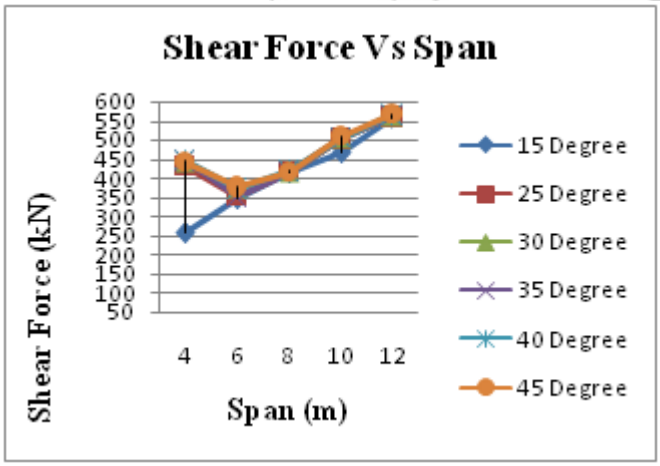

2) Bending Moment

The maximum bending moment is observed during increment in skew angle. Also increase in span length will cause effect of bending moment on bridges.

BENDING MOMENT (kN-m)					
Skew Angle	Span				
	4	6	8	10	12
15°	535.48	382.73	461.77	709.91	1041.75
25°	522.19	387.36	477.33	721.4	1060.27
30°	514.04	397.25	480.24	734.18	1073.58
35°	509.5	407.25	495.52	734.98	1093.48
40°	541.56	420.02	514.33	738.28	1119.07
45°	494.11	365.02	545.39	736.87	1154.12

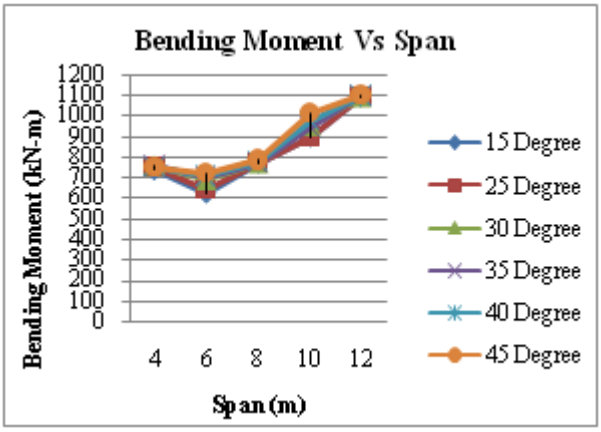

3) Torsional Moment

Torsional moment occurs due to effect of cantilever load transfer in skew slab. The increase of torsional moment is observed with increase in span length and skew angle.

Torsional Moment (kN-m)					
Skew Angle	Span				
	4	6	8	10	12
15°	735.57	622.61	770.46	898.93	1090.39
25°	748.14	642.24	767.17	894.74	1092.82
30°	761.87	687.44	768.57	948.49	1094.21
35°	755.61	699.19	771.41	947.14	1095.78
40°	750.25	706.13	777.82	977.45	1097.47
45°	748.73	719.08	785.19	1010.11	1100.38

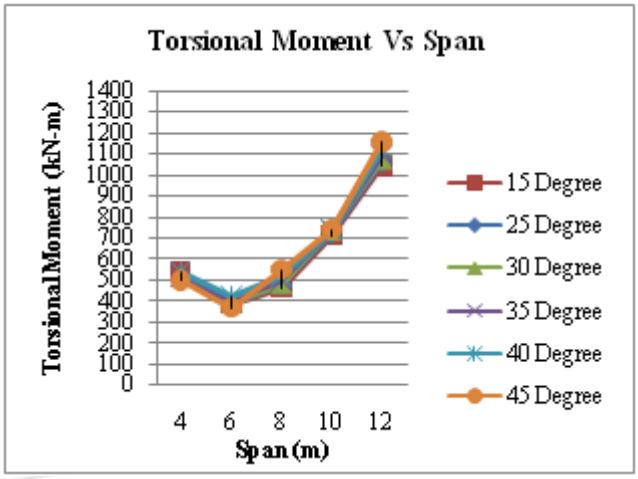

5. Conclusions

Based on analysis of different configurations of bridges, the following conclusions can be drawn:

1) For Class A Loading the increase in shear force for low skew angle (<15°) the shear force increases linearly. The pattern of increase of shear force with respect to span is straight in nature.
2) There is about 20% increase in shear force when span increases from 4m to 6m. As the skew angle is increase, shear force is decreased about 30% when span change to 6m from 4m from thereon, hear force for each span increase.
3) The bending moment increases with increase of skew angle and spans of bridges. For each span and skew

angle, the change of about 20% is observed in bending moment nature.

4) In case of torsional moment, the pattern of increment in torsional moment is similar to pattern of bending moment. There is about 10% of linear variation increase in torsional moment comparing to bending moment can be noticed broadly.

While adopting design under Class A Loading, designer must give proper attention to torsional moment as much as bending moment. High torsional moments are observed for skew angle more than 30°. There might be requirement of torsional reinforcement to counteract these torsional moments in bridges. There is sharp decrease in shear force response for low span bridges even with high skew angle. The bending moment increase with increase in skew angle and span length.

References

[1] Vikash Khatri, P. R. Maiti, P. K. Singh & Ansuman Kar, "Analysis Of Skew Bridges Using Computational Methods" International Journal Of Computational Engineering Research. May-June 2012, Vol. 2, Issue No. 3, 628-636

[2] Arindham Dhar, Mithil Mujumdaar, Mandakini Chowdhary, Somnath Karmakar, "Effect Of Skew Angle On Longitudinal Girder (Support Shear, Moment, Torsion) And Deck Slab Of An Irc Skew Bridge." The Indian Concrete Journal, December 2013, 47-52

[3] M. Ameerutheen, Sri. Aravindan, "Study of Stresses on Composite Girder Bridge Over Square and Skew Span" International Journal of Civil Engineering and Technology (Ijciet), February 2014, Volume 5, Issue 2, 88-96

[4] Mehrdad Bisadi, "Moving Load Analysis on Skewed Railway Bridge" Journal of Asian Scientific Research, 2013, 3(2), 198-203

[5] Indian Road Congress, New Delhi IRC 6-2000, "Standard Specification and Code of Practice for Road Bridges", Section II "Loads and Stresses", Indian Road Congress, New Delhi.

[6] M. S. Qaqish, "Effect of Skew Angle on Distribution of Bending Moments in Bridge Slabs", Journal of Applied Science 6 (2): 366-372, 2006

[7] Essentials of Bridge Engineering by D. Johnson Victor, Oxford & IBH Publishing Co. Pvt. Ltd, New Delhi, Sixth Edition, PP 122-124